Tiny sensors over Geostationary satellites

15 January 2022

Frank Zeppenfeldt (ESA) with support from

Munich Center for Space Communications

neosat

Lacuna

Fraunhofer IIS

ESA Telecommunications - what do we do?

We fund research and development in satcom via a program called **ARTES**
(Advanced Research in Telecommunications Systems)

We fund developments or studies in **ground segment, space segment, payload and system – including in-orbit validation**

We issue tenders for **long-term developments – we fund 100%**

Industry can always submit a proposal for a development you see a market opportunity for – **we co-fund 80 to 50%, you bring 20 to 50%**

We build partnerships with operators to validate **innovative technology, equipment and services** in-orbit and on-ground

We support European companies with **patents**, **test facilities**, advice on **regulatory** matters and **technical trade-off's**.

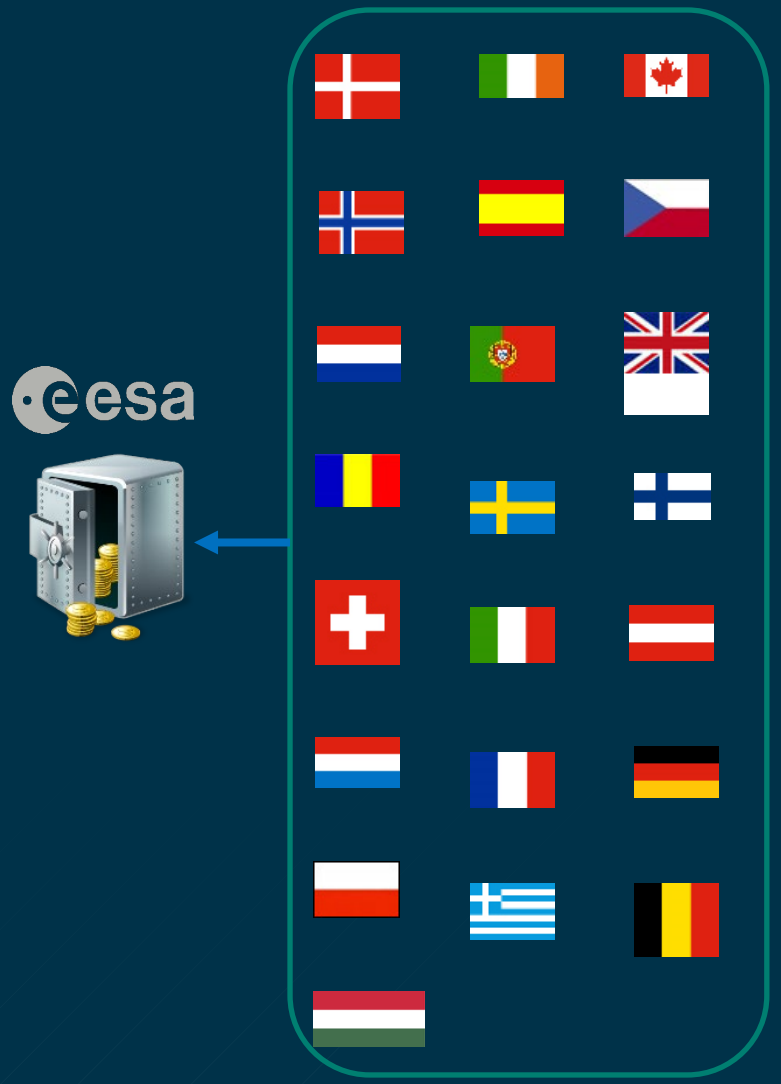

Background and objectives

Question:

Some satellite-specific IoT protocols are have been developed, but can we re-use more from the terrestrial world ?

→ This could possibly lead to **very low cost end nodes**.

There are many start-ups looking into new smallsat constellations for IoT, but could we not use existing geostationary satellites for such services?

→ This could possibly lead to **near real-time services**.

Demonstrate performance of terrestrially-inspired protocols **over the air to geostationary satellites**

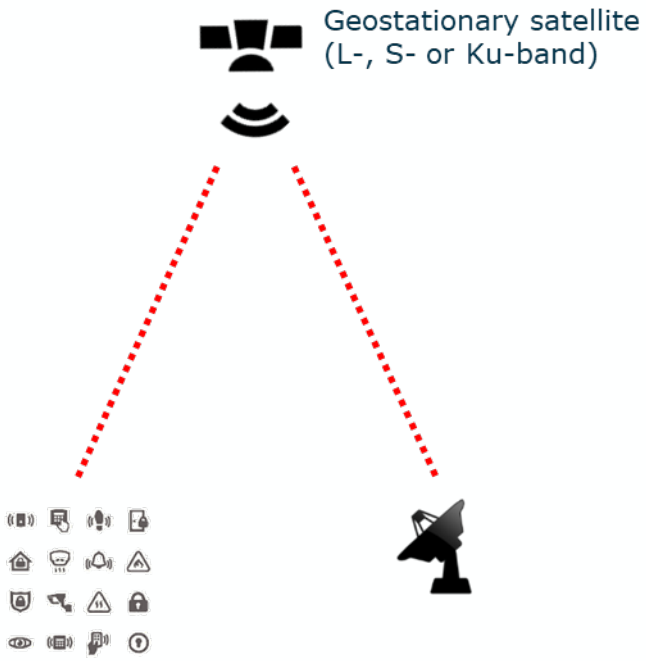

Scope of work

Assess various terrestrial (inspired) protocols

Initiate small test campaigns ← Satellite capacity

- **LoRa** over Ku-band and UHF band — neosat, Munich Center for Space Communications
- **LoRa** over GEO in S-band — Lacuna, esa
- **UCSS** over Ku-, S- and L-band — neosat, Munich Center for Space Communications
- **TS-UNB** over GEO S-band — Fraunhofer IIS

↓

Webcasts with findings

IoT and satellite communications

Geostationary satellite

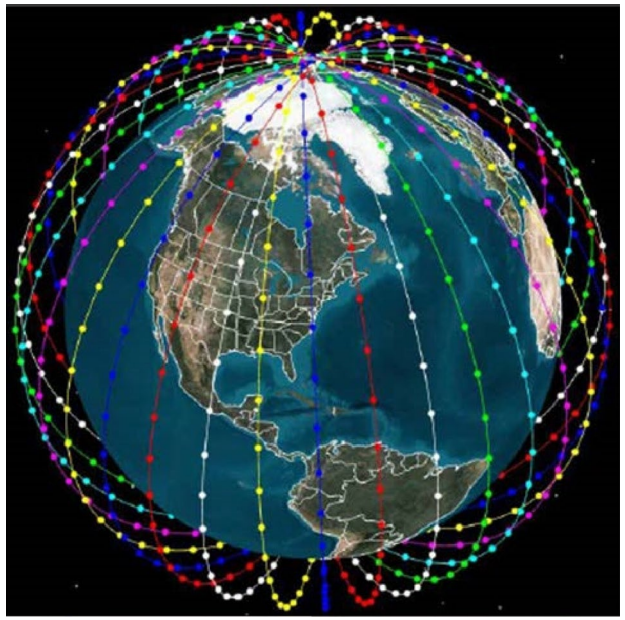

Non-geostationary satellite

Lora over GEO Ku-band

GeoLoRa

Measurement Campaign (Ku-Band)

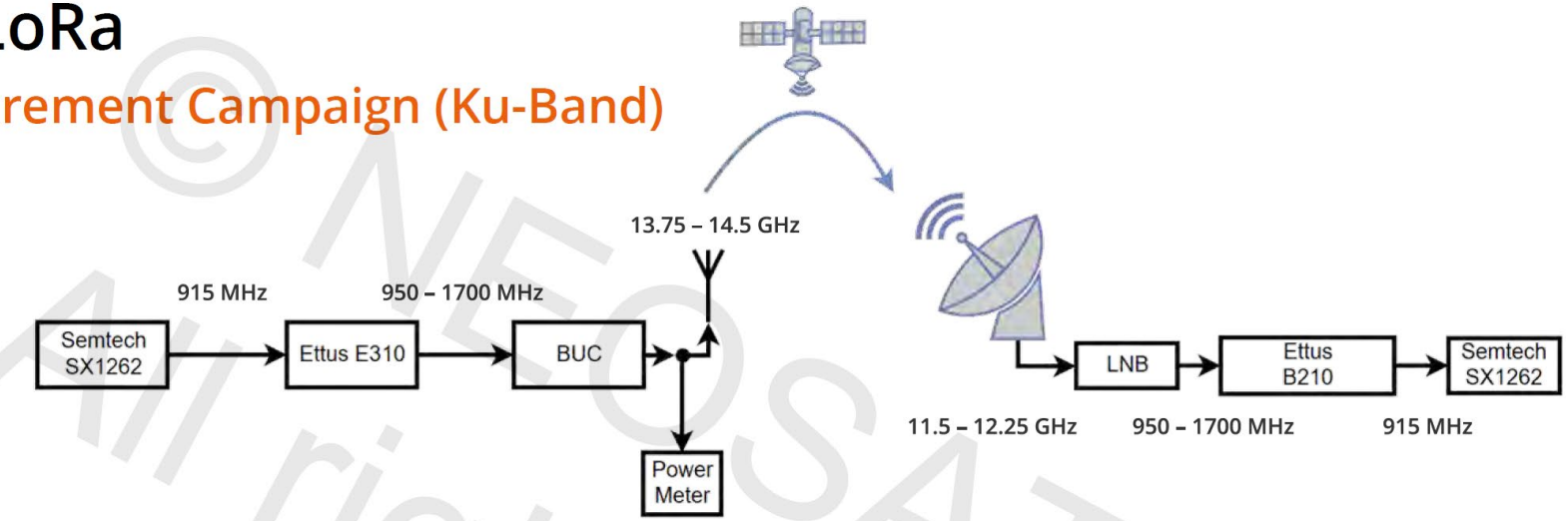

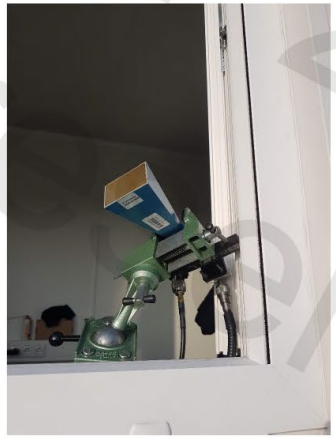

Bitrate	110 bit/s	EIRP 27 dBm
Bandwidth	7.8 kHz	Min SNR -12
Spreading Factor	**9**	
Bitrate	61 bit/s	EIRP 24 dBm
Bandwidth	7.8 kHz	Min SNR -15
Spreading Factor	**10**	
Bitrate	33 bit/s	**NOT OK**
Bandwidth	7.8 kHz	
Spreading Factor	**11**	

Lora over GEO UHF-band

GeoLoRa

Measurement Campaign (UHF)

EIRP 19 dBm

Semtech SX1262
LoRa® Dev Kit

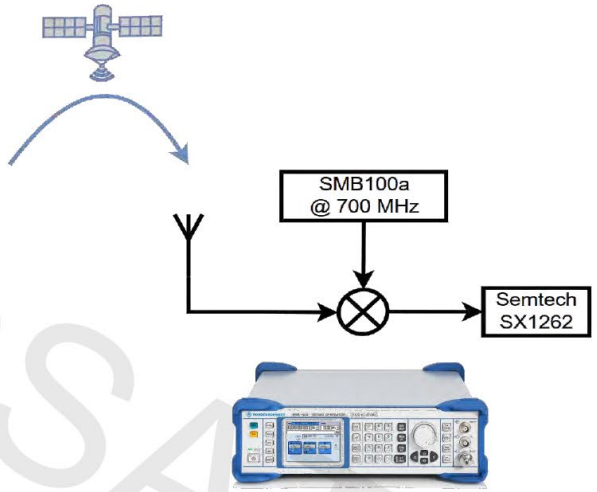

Bitrate	61 bit/s	
Bandwidth	7.8 kHz	Min SNR -16
Spreading Factor	**10**	
Bitrate	33 bit/s	
Bandwidth	7.8 kHz	Min SNR -18
Spreading Factor	**11**	

Lora over S-band GEO - setup

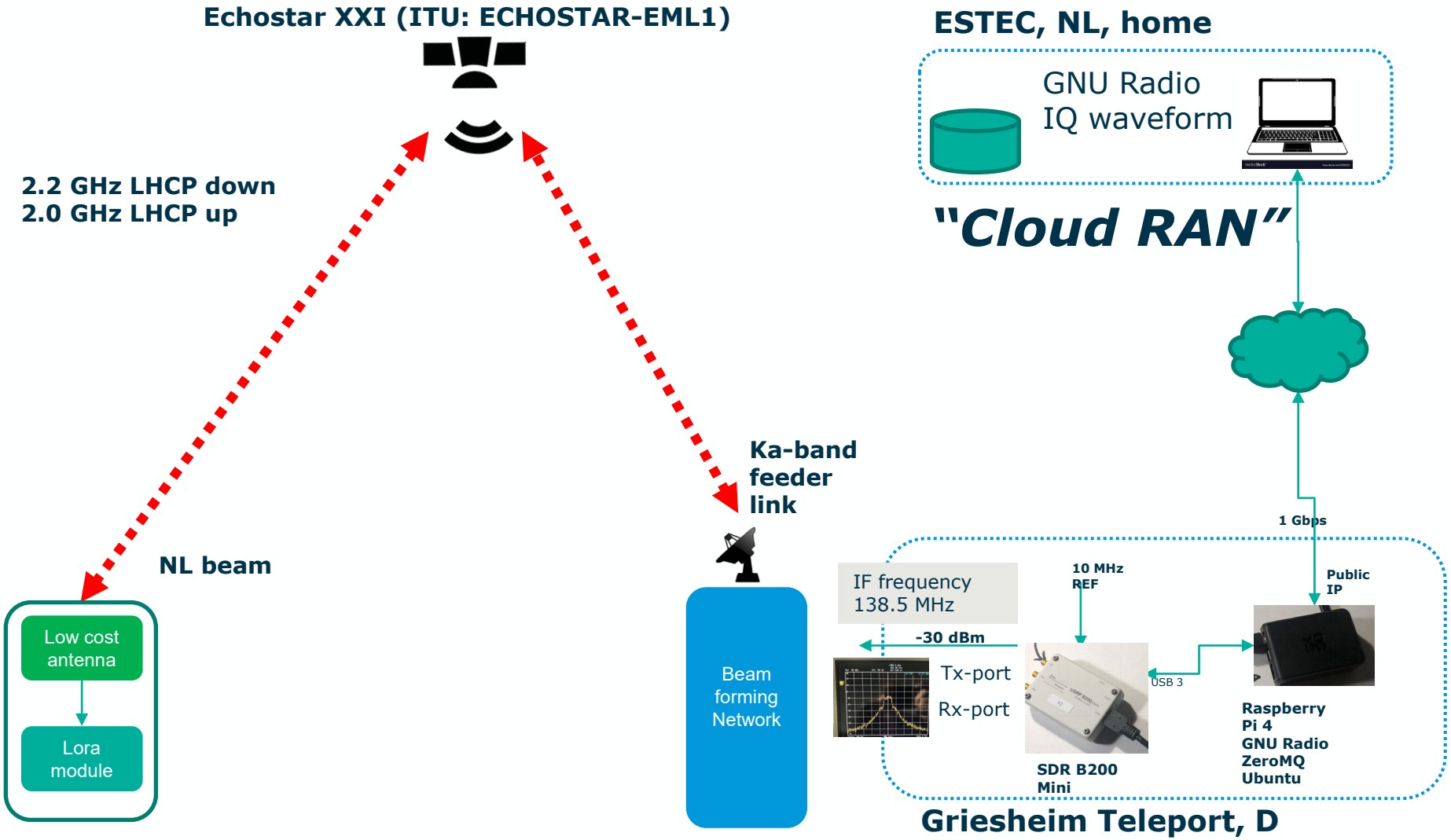

Lora over S-band GEO – downlink

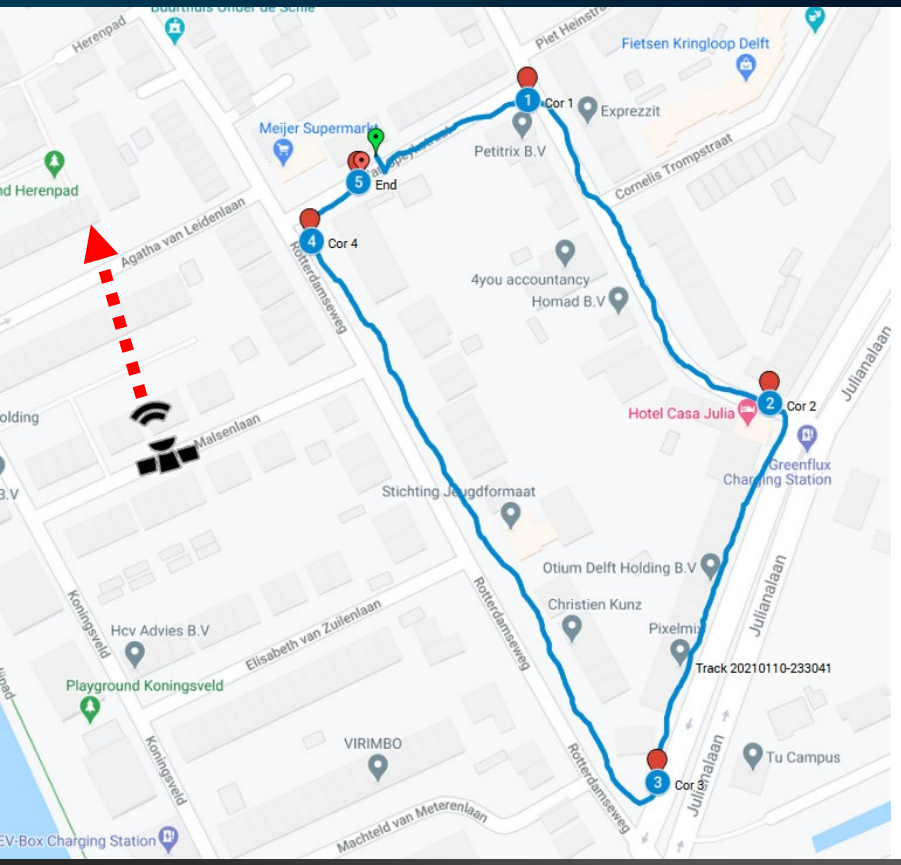

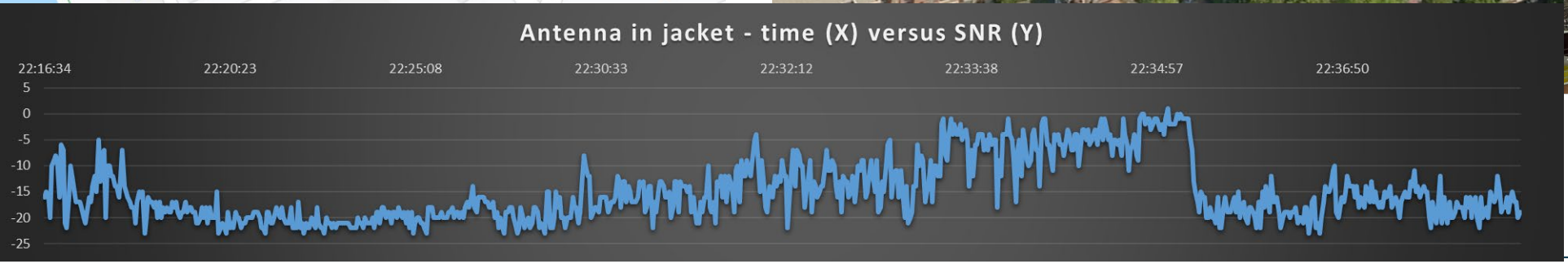

Lora over S-band GEO – uplink

LoRa 125kHz/SF11

- EIRP of **8 dBm** (linear)
- With a few dB of margin

Absolute minimum

- LoRa 10.4kHz/SF11, *LR1110* to *LR1110*
- EIRP of **-5 dBm** (linear polarisation)
- 45 bps (excl. error coding)

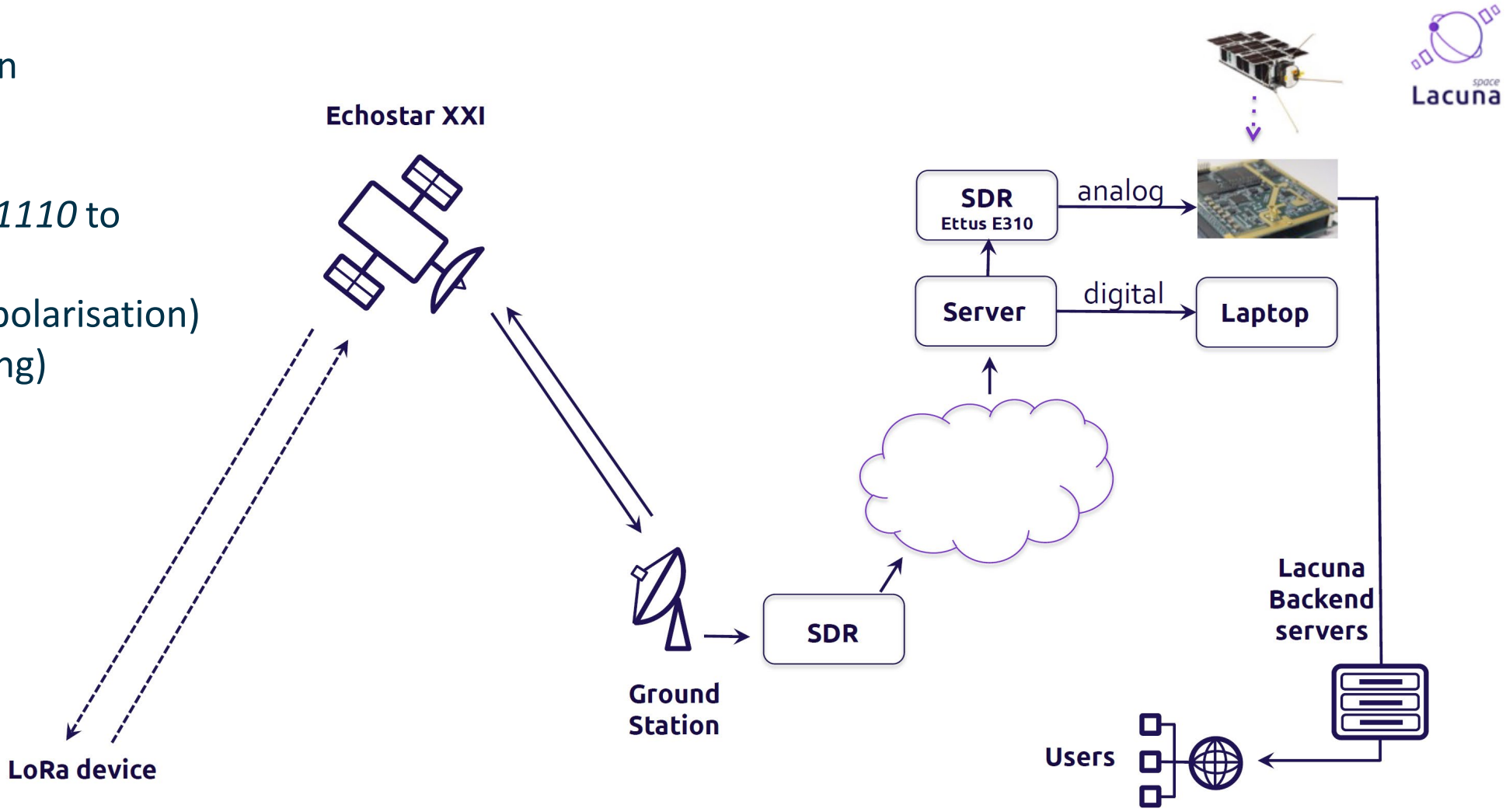

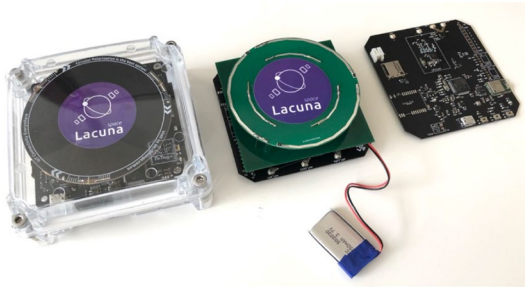

UCSS over Ku-band

UCSS Multiple Access Demonstration

Ku - Band

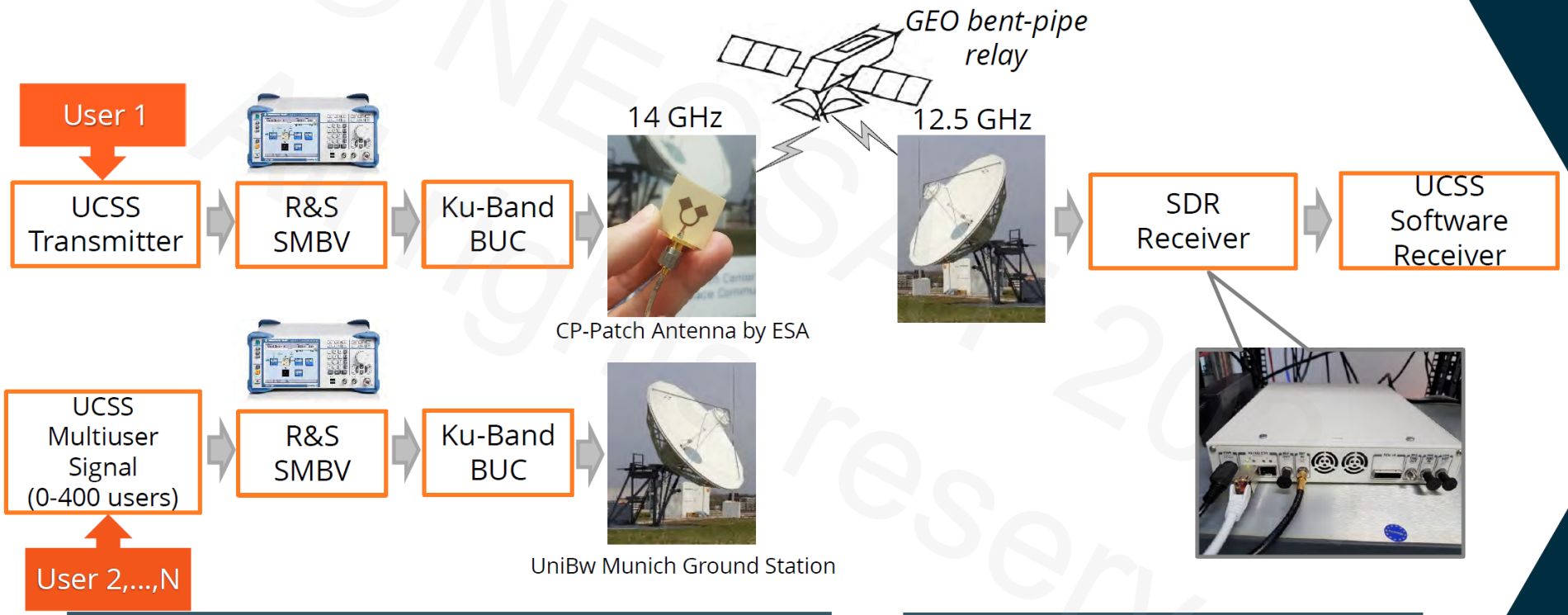

Regulatory Limit (Ku-Band):
- 6 dBW in 40 kHz

Minimum Bandwidth:
~ 500 kHz

Munich Center for Space Communications

Link closed:

Bitrate	5.8 bit/s
EIRP	23 dBm

Simultaneous users:

Users	100
Error Rate	< 0.01

UCSS over S-band (and L-band)

UCSS Test over Echostar

Setup in S-Band

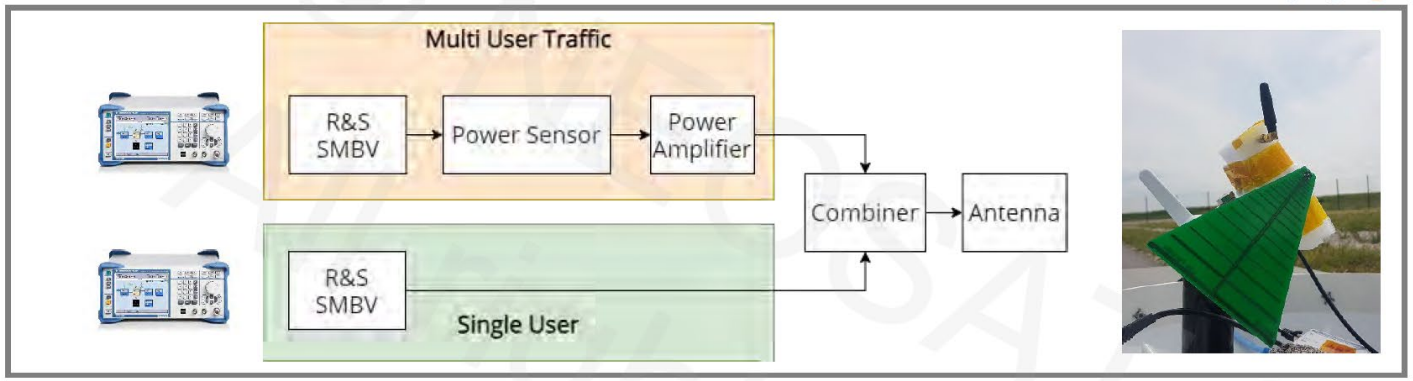

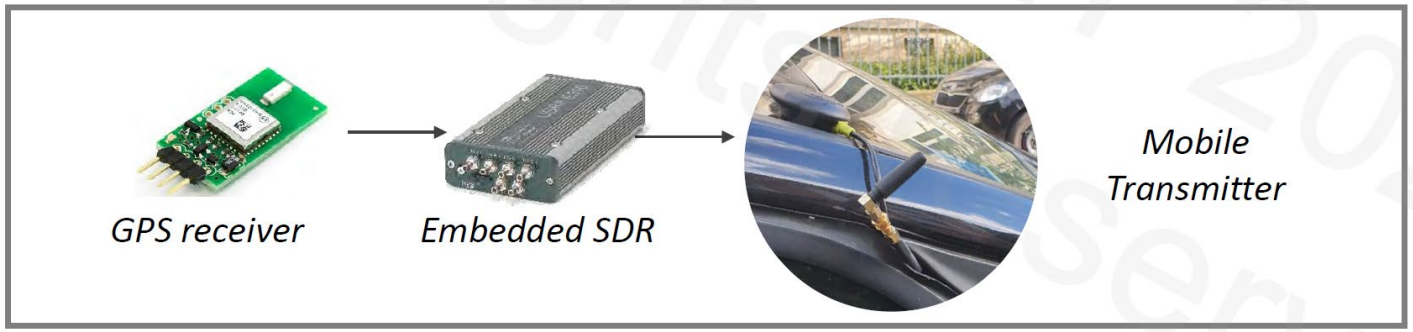

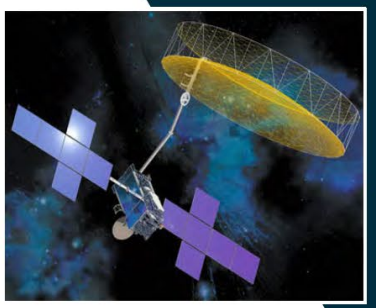

UCSS packtes sent during 2 test days:

3,919,816

Link closed:

Bitrate	12.5 bit/s
EIRP	-4.5 dBm

Simultaneous users:

Users	300
Error Rate	< 0.001

0.5 mW

50 kHz

60.000 users

768 bytes/day

TS-UNB over GEO Ku-band

- **TS-UNB** Telegram Splitting Ultra Narrow Band ETSI Standard: Protocol based on TSMA (TS 103357) - Lightweight, but robust, secure and flexible radio protocol
- **mioty®**(Fraunhofer IIS) Implementation of TS-UNB (nodes and base stations)

Hardware Setup

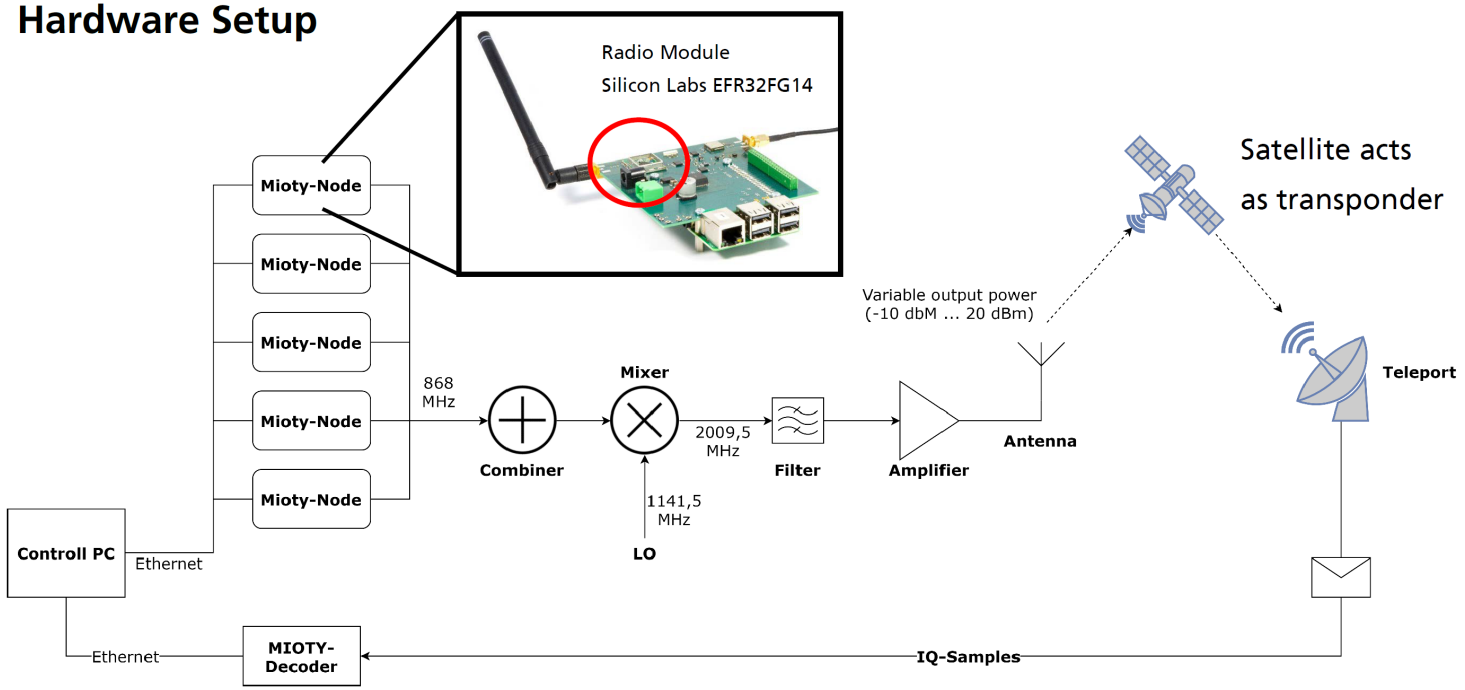

- **Native mioty®**: no change of waveform nor decoder required
- **10dBm EIRP** only required to get reasonable low packet error rates
- Even with high system loads (3.5 million telegrams/day, 20 Bytes/200kHz BW) comparable low error rates possible (1% PER)

Plant-powered satellite IoT sensor

14 JANUARY WORLD PREMIER: FIRST PLANT-POWERED IOT SENSOR SENDS SIGNAL TO SPACE

Posted on 15: 00h in Plant-e news door Sharon Polman • 5 Reactions • 3 Likes • Share

Plant-e Spark of nature

Lacuna space

esa

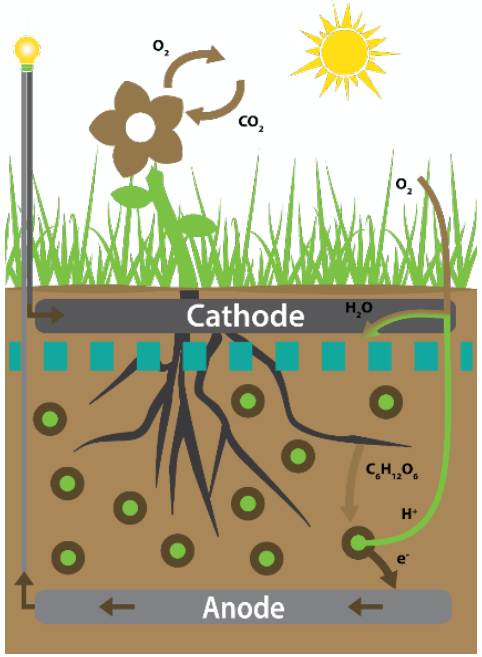

Satellite modem solely powered by the plant, sending environmental data

Conclusions

- Demonstrated that some terrestrially-inspired, very low data rate, low power IoT protocols work over GEO – often scalable to massive deployments – all with very low cost IoT node costs

- Link budgets and early experiments suggest that scenarios of GEO satcom with individuals/wearables is feasible

- Larger-scale trials with prototype hardware?

- Triggered various requests for other companies for similar testing, claiming "*We can do better*" !

- New series of tests in February 2022

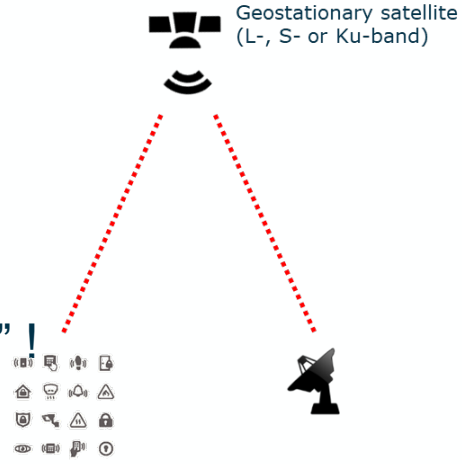

Areas for future work

1. Novel encapsulations (SCHC RFC 9011) allowing IPv6 over very narrow links
2. Combinations with localisation/RTK
3. Combinations with TinyML/AI – to do smart things at the edge for satcom
4. Combinations with wearables/antennas and energy harvesting
5. Low rate codecs over satellite (M17)
6. Regulatory improvements for Ku-band very-small antennas

Acknowledgements and contacts

1. For GeoLora experiments over Ku-band and UHF, and UCSS over various frequency bands
   - Kai-Uwe Storek storek@neosat.de
   - Christian Hofmann c.hofmann@unibw.de

2. For LoRa over S-band
   - Thomas Telkamp thomas@lacuna.space

3. For TS-UNB over S-band
   - Florian Leschka, Jonas Mrazek florian.leschka@iis.fraunhofer.de , jonas.mrazek@iis.fraunhofer.de

4. General enquiries for future tests/projects
   - Frank.Zeppenfeldt@esa.int